strands®
-lighting division

MANUAL

DARK KNIGHT STROBE LIGHT

RED = +VDC (ECE R65 CLASS 2 Amber version)
BLACK = - TO CHASSIS GROUND
WHITE = ECE R65 CLASS 1 - Constantly connect black to white wire to achieve low intensity.
YELLOW = PATTERN SELECTION AND SYNCHRONIZATION (Maximum 12 pcs)
For pattern selection: Apply yellow to black.
Less than 1 second for next pattern.
3-5 seconds for previous pattern.
6-9 seconds for factory mode (pattern no. 1)
For synchronisation:
Connect all yellow wires.

Simultaneous or Alternating Flash + Reset group: Apply yellow to black wire

Simultaneous or Alternating Flash
1. Set Group A: Connect yellow wire of all Group A's head together, apply to black wire 16-19 seconds. Group A is set. (Group A will not light up at this time, which is the normal phenomenon.)
2. Set Group B: Connect yellow wire of all Group B's head together, apply to black wire 21-24 seconds, Group B is set. (Group B will light up and can change flash pattern after power off and on; and it will follow Group B's flash pattern when connect yellow wire of Group A and Group B together.)
3. Use Group A/B: Connect yellow wire of Group A and Group B together, apply it to black wire 11-14 seconds for Alternating flash; apply it to black wire 11-14 seconds again back to Simultaneous flash. (If the time exceeds 14 seconds, all heads will NOT light up, need reset group and grouping again.)

Reset group:
Connect yellow wire of Group A and Group B's head together, apply to black wire 21-24 seconds, then power off and on, head light up, means resetting successfully. (Then can use individually or group again)

FLASH PATTERNS			
1	Single flash (ECE R65)	12	Single flash - split
2	Single flash - Slow	13	Double flash - split
3	Double flash (ECE R65)	14	Quad flash - split
4	Double flash - Slow	15	Octa flash - split
5	Triple flash	16	Single flash - split accelerate
6	Quad flash - Fast (ECE R65)	17	Double flash - split accelerate
7	Quad flash - Slow	18	SOS flash
8	Octa flash - Fast	19	Cycle(1,8,3,9,4,18)
9	Octa flash - Slow	20	Cycle(2,7,9,11,14,16)
10	Twelve flash	21	Steady on
11	Sixteen flash	18/19/20/21 without asynchronization Flash	

Part no. 850400, 850401, 850402, 850403, 850404,850419,850420,850404G,850404B,850404R,850404W

Contact us if you need support: support@strands.se or +46(0)320-450450

FUNCTION 3 YEARS WARRANTY
www.strands.se
www.strandseurope.com

strands®
-lighting division

READ THIS BEFORE INSTALLATION
READ ALL INSTRUCTIONS AND STUDY DIAGRAMS BEFORE INSTALLING YOUR NEW LIGHTS!

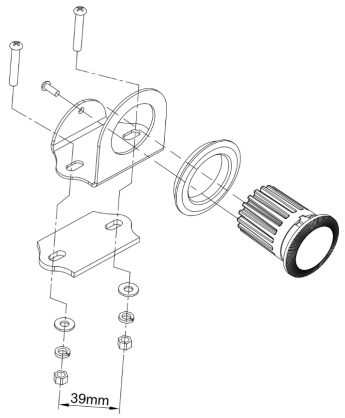

(Installation Diagram for 850419 and 850420)

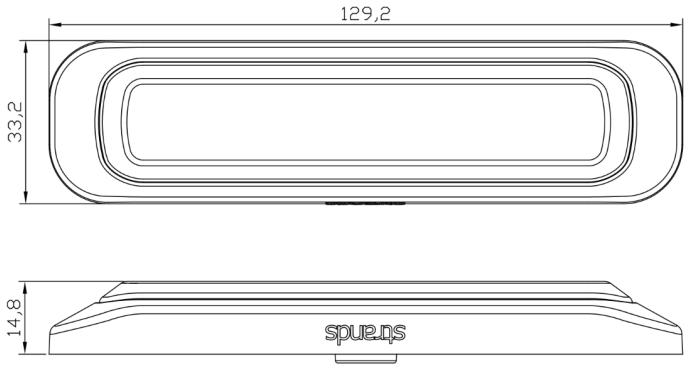

(850404,850404G,850404B,850404R,850404W)

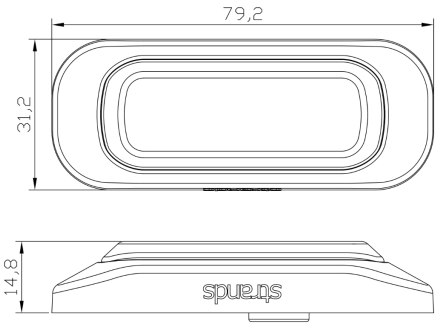

(850400)

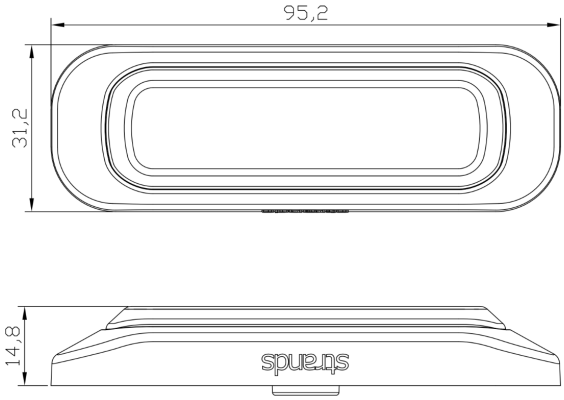

(850401,850402)

LEGAL MOUNTING

Check with state or local authorities for laws governing usage and proper mounting of your new lights.

TAKE CARE OF YOUR PRODUCT

Keep the product clean. Dirt on the lens and heat-sink may shorten the products lifetime.

We recommend using lukewarm water and alkaline degreasing.
Follow the degreasing instructions carefully and rinse off gently with cold or lukewarm water on low pressure.

WARNING!
Strong chemicals should not be used on the product. If you accidently get strong chemicals on the product, rinse off immediately, use plenty of water so that no chemicals remain in any joint.
Some chemicals have a small amount of solvent in them, this can dissolve sealing adhesives and compromise the product's waterproofness.
Some chemicals pull out liquid from plastic and rubber-based components, which makes the plastic or rubber brittle and bursts more easily.
Be careful not to use high water pressure close up on the product.
If you use high water pressure at short distances, most products find it difficult to close out the water.

INSTALLATION
If there is a contact/connector on the product, it should not be cutted. If the connector is cut, the warranty is not valid.

If the product has loose cable and no connector. If the cable is shorter than 50 cm, the cable must not be cutted. If the cable is cut, the warranty is not valid.
If the cable is longer than 50 cm, it is ok to shorten the cable, but not shorter than 50 cm.
If the cable is cut shorter than 50 cm, the warranty is not valid.

Tighten screws and bolts so that they do not loosen or chafe.
Do not tighten screws so hard that the protective bearings on the product breaks.

WARNING!
Do not use higher volts than the product description states.
This light becomes hot under continuous use. Don´t remove or touch the casing for at least 30 minutes after turning the lamp off.